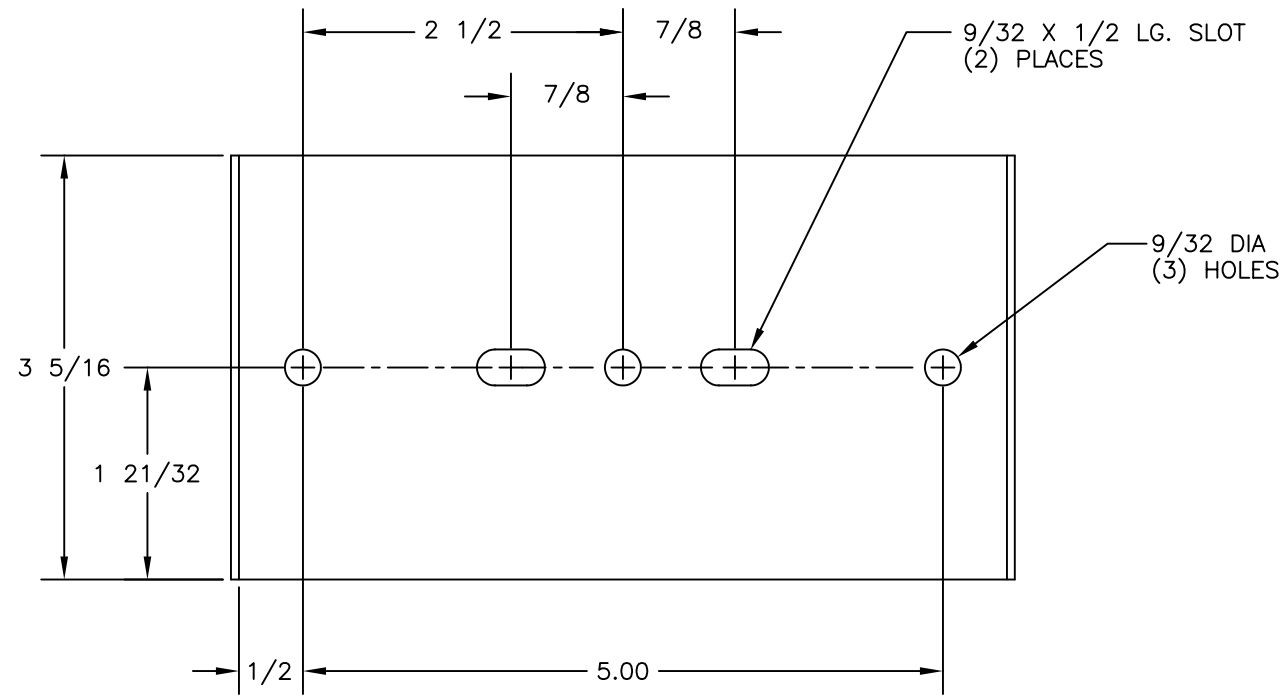

NOTES:
1) MATERIAL– ALUMINUM SHEET, TYPE 3003–H14 OR 5052–H32
0.063 THICK (B & S GA. #14)
2) PART TO BE FREE OF BURRS AND SHARP EDGES.
3) ALL DIMENSIONS BEFORE FINISH.
4) FINISH– PAINT BLACK WITH FINE TEXTURE PER SIMCO SPECIFICATION 4750805

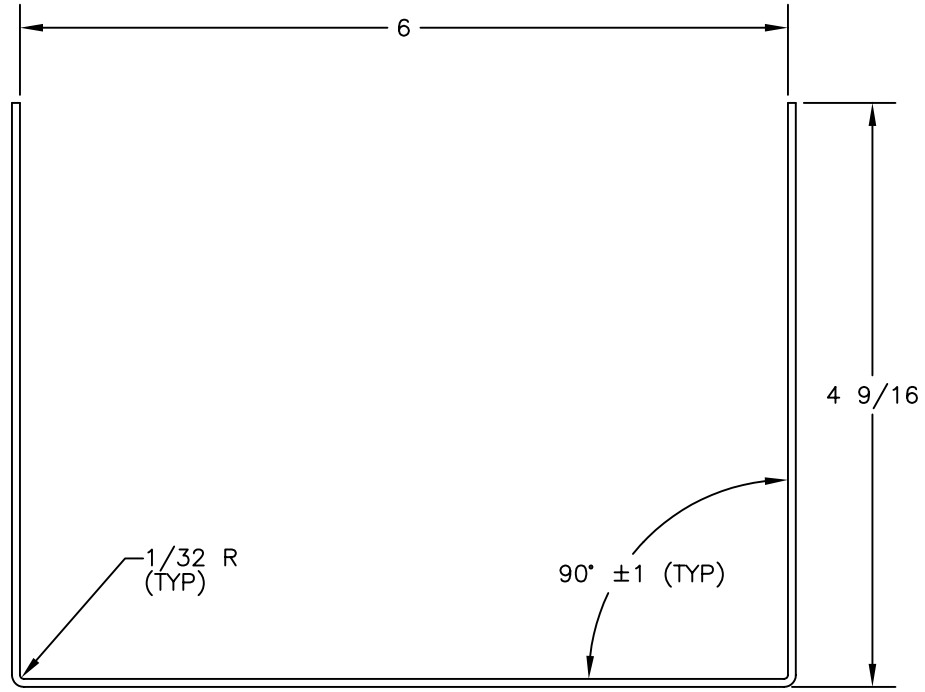

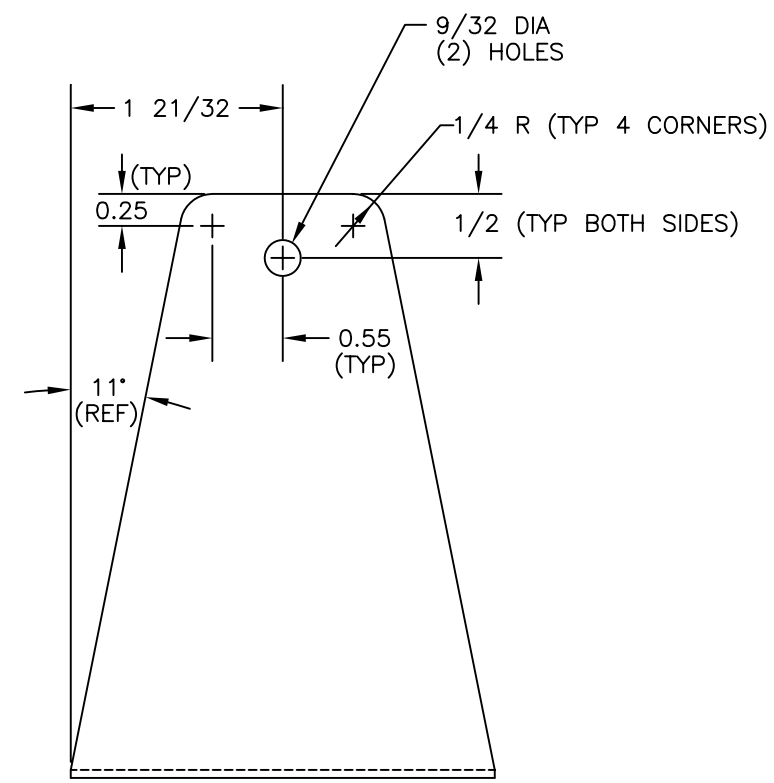

C.A.D. GENERATED
NO MANUAL CHANGES ARE
TO BE MADE TO THIS DOCUMENT

THESE DRAWINGS AND SPECIFICATIONS ARE THE EXCLUSIVE PROPERTY OF SIMCO CO., INCORPORATED ISSUED IN STRICT CONFIDENCE AND SHALL NOT, WITHOUT THE PRIOR WRITTEN PERMISSION OF SIMCO CO., INC., BE REPRODUCED, COPIED, OR USED FOR ANY PURPOSE WHATSOEVER EXCEPT THE MANUFACTURE OF ARTICLES FOR SIMCO CO., INC.

REV	DESCRIPTION	ECN DATE
B	ADDED SLOTS/ HOLE TO BOTTOM SURFACE	535 2/27/97
A	ADDED PAINT SPEC.	408 9/1/95

TITLE STAND AEROSTAT PC

MATERIAL SEE NOTES

FINISH SEE NOTES

SIMCO® SIMCO CO., INCORPORATED
2257 NORTH PENN ROAD
HATFIELD, PA. 19440–1998

THIRD ANGLE PROJECTION

XXX/ FINISH ALL OVER

DIMENSIONS IN INCHES; TOLERANCES UNLESS SPECIFIED
.XXX=±0.005 .XX=±0.01 FRACTIONS=±1/64 ANGLE=±1/2°
DO NOT SCALE DRAWING

DRAFTSMAN	DATE	CHECKER	DATE
B CARVER	5–16–94		
PROJ ENGR	DATE	MFGR ENGR	DATE
R RODRIGO	5–18–94	T GRAEF	5–18–94

FILE NAME

SCALE 1/1

SHEET 1 OF 1

DRAWING NUMBER 4250654